Parts of the Eye Answer Key

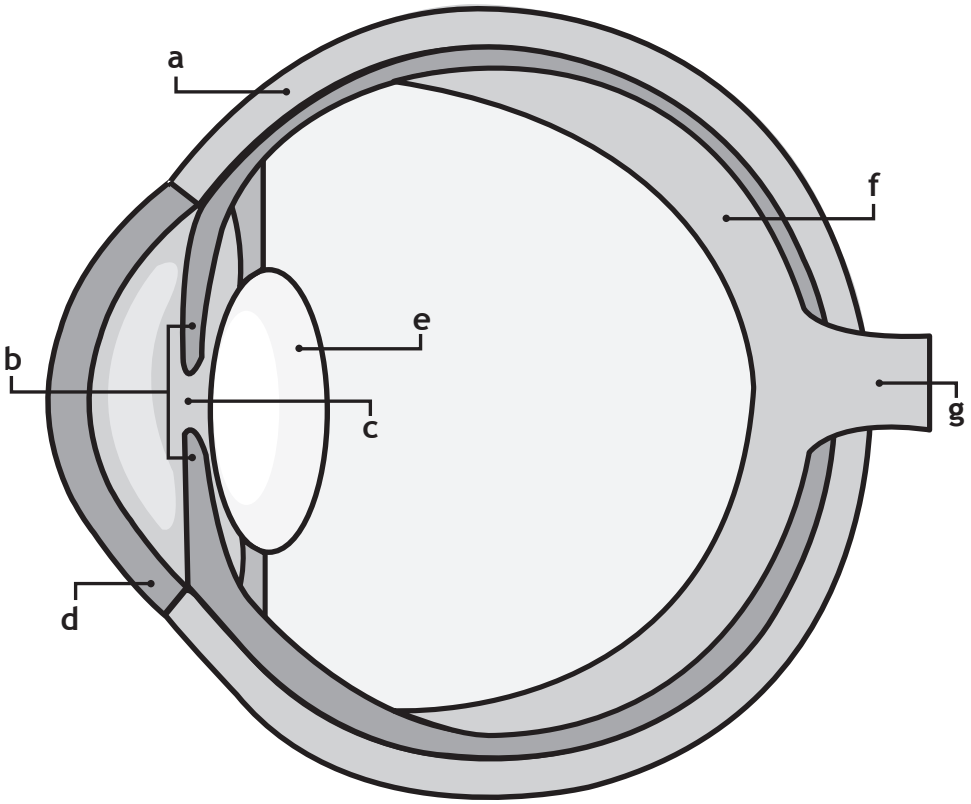

WORD BANK			
cornea	lens	pupil	sclera
iris	optic nerve	retina	

a. The white part of the eye is the *sclera*.

b. The colored part of the eye is the *iris*.

c. The black circle in the middle of the eye is the *pupil*.

d. The transparent bump in the front of the eye is the *cornea*.

e. The *lens* focuses light on the back of the eyeball.

f. The *retina* changes light the eye receives into nerve signals.

g. The *optic nerve* carries nerve signals from the eye to the brain.

© 2017 The Nemours Foundation/KidsHealth. Reproduction permitted for individual classroom use.